INPUT

VOUT = 0.8V * (1 + (R1 / R2))

R2 must not be higher than 100kΩ

3.3V = 330k + 100k
5V = 536k + 100k

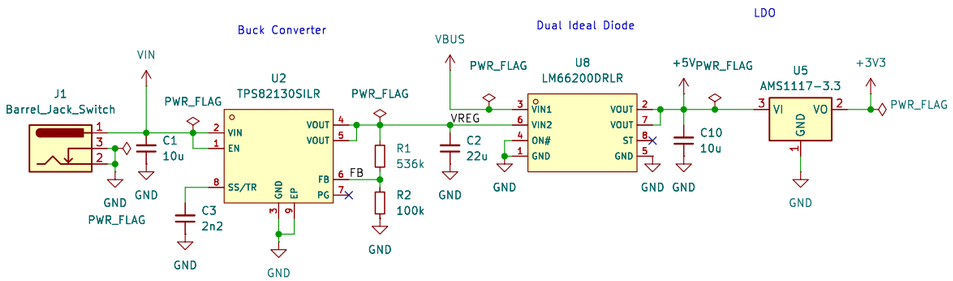

I2C / QWIIC

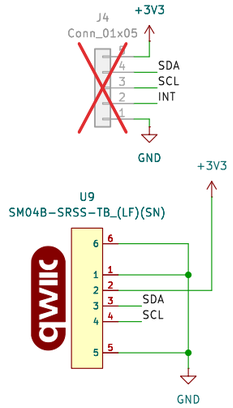

TEMP/HUM

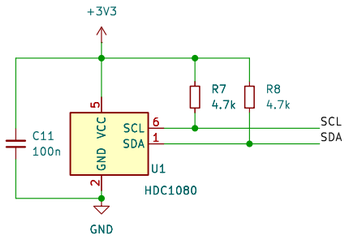

FANS

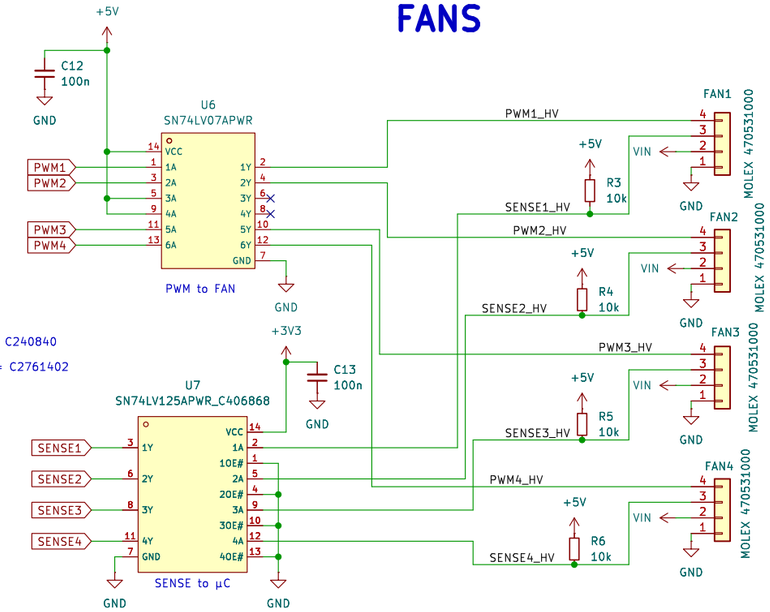

Fan Parts

MOLEX 47053-1000 = C240840
Wieson 2510C888-001
? FOXCONN HF1004E = C2761402

SWITCHES

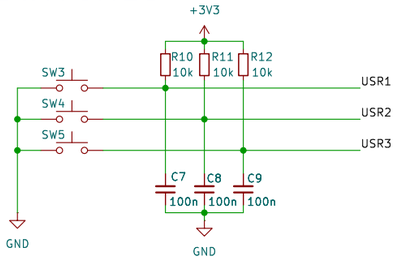

ESP32

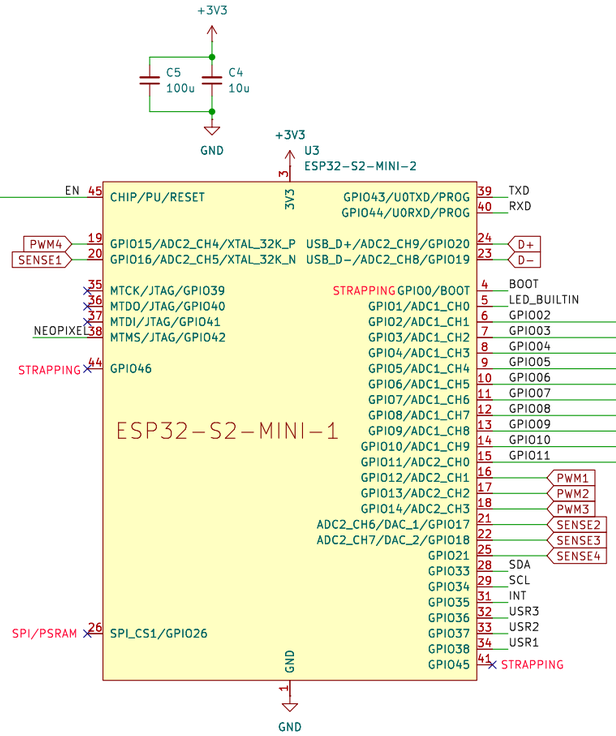

Note: Mini-1 and Mini-2 are pin compatible

GPIO0, GPIO45 and GPIO46 are strapping pins
GPIO26-32 are usually used for SPI flash and PSRAM and not recommended for other uses.
GPIO39-42 are usually used for inline debug
GPIO46 is fixed to pull-down and is input only

PROGRAMMING

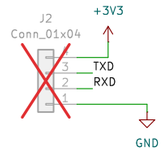

USB-C

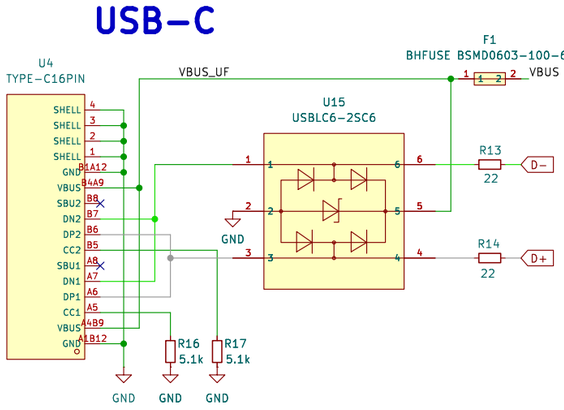

NEOPIXEL

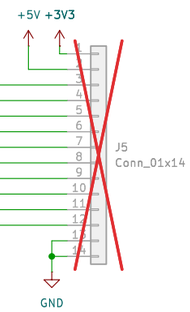

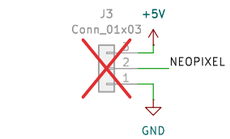

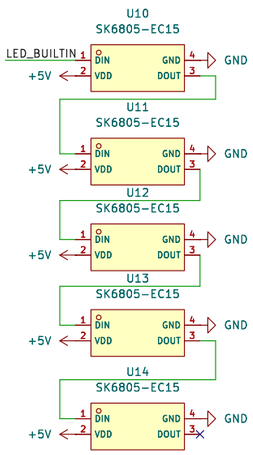

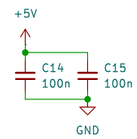

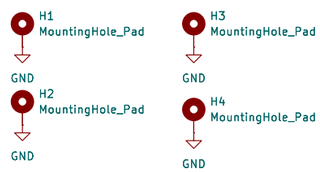

Arthofer Engineering e.U.

Sheet: /
File: Wifi Fancontroller ESP32S2 Rev 3.3.kicad_sch

Title: ESP32 Fancontroller

Size: A3	Date:	Rev: 3.3
KiCad E.D.A. 9.0.7		Id: 1/1